# Nippon Pulse
*Your Partner in Motion Control*

## Tin-Can Steppers
## PF(C)25

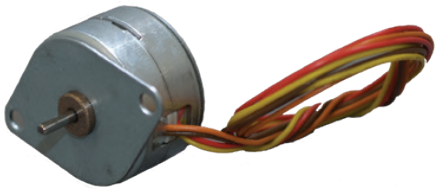

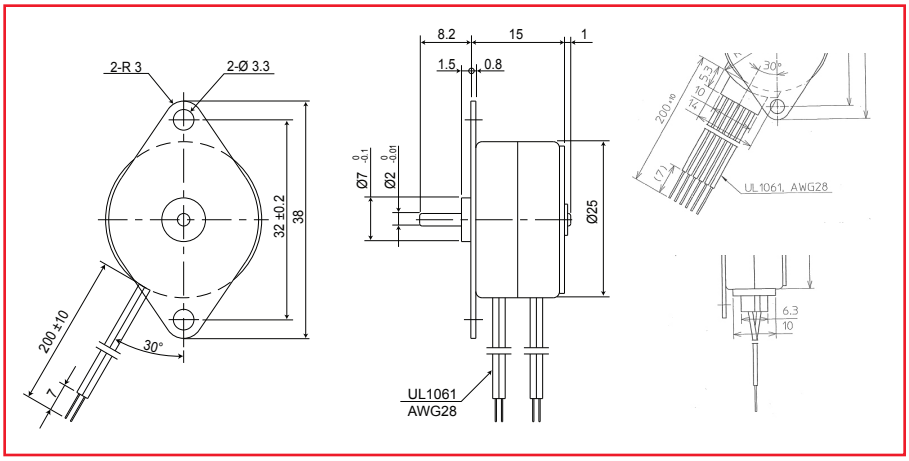


## Specifications

| Specification | Unit | PF(C)25-24 | | | | PF(C)25-48 | | | |
|---|---|---|---|---|---|---|---|---|---|
| Type of Winding | | Unipolar | | Bipolar | | Unipolar | | Bipolar | |
| Excitation Mode* | | Full step (2-2) | | | | Full step (2-2) | | | |
| Step Angle | ° | 15 ±5% | | | | 7.5 ±5% | | | |
| Steps Per Revolution* | | 24 | | | | 48 | | | |
| Rated Voltage | V | 12 | 5 | 12 | 5 | 12 | 5 | 12 | 5 |
| Resistance | Ω | 120 ±7% | 16 ±7% | 122 ±7% | 15 ±7% | 120 ±7% | 16 ±7% | 122 ±7% | 15 ±7% |
| Inductance | mH | 34 | 4.5 | 66 | 8 | 39 | 5.5 | 81 | 10 |
| Holding Torque* | mN·m | 8 | 8 | 10 | 10 | 10 | 10 | 12 | 12 |
| Rotor Inertia | kg·m² | $1.0 \times 10^{-7}$ | | | | $1.0 \times 10^{-7}$ | | | |
| Starting Pulse Rate* | pps | 490 | | | | 790 | | | |
| Slewing Pulse Rate* | pps | 900 | | | | | | | |
| Operating Temp. Range | °C | -10 to +50 | | | | | | | |
| Temperature Rise* | °C | 70 | | | | | | | |
| Weight | g | 35 | | | | | | | |

## Torque Curve (pull-out torque)*

### Bipolar Constant Voltage (48P1)

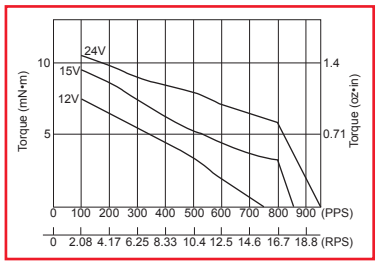


Coil Resistance: 122Ω

### Bipolar Constant Current (48R1)

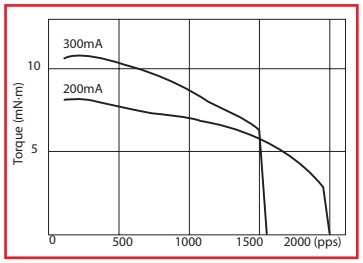


Coil Resistance: 35Ω Supply Voltage: 24V

### Unipolar Constant Voltage (48C1)

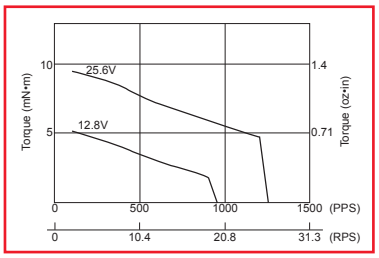


Coil Resistance: 120Ω

### Unipolar Constant Current (48H1)

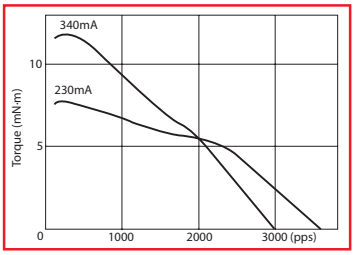


Coil Resistance: 34Ω Supply Voltage: 24V

All tin-can motor specifications are based on full-step constant voltage operation
Magnet type: Anisotropic
Note: Torque curves are for reference only and are not guaranteed

## Dimensions of Geared Model

### PF(C)25 w/P Gear Head

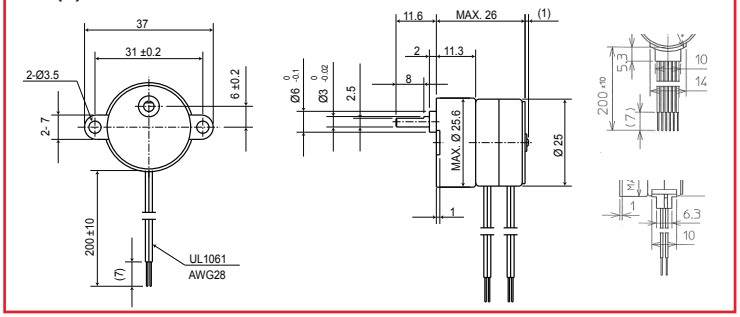


| Gear Ratio | 6/25 | 1/5 | 3/25 | 1/10 | 2/25 | 1/15 | 3/50 | 1/20 |
|---|---|---|---|---|---|---|---|---|
| Ordinary Torque | 20mN·m | | | | 50mN·m | | | |
| Destruction Torque | 60mN·m | | | | 150mN·m | | | |

| Gear Ratio | 1/25 | 1/30 | 1/50 | 1/60 | 1/75 |
|---|---|---|---|---|---|
| Ordinary Torque | 70mN·m | | | | |
| Destruction Torque | 210mN·m | | | | |

| Gear Ratio | 1/100 | 1/120 | 1/125 | 1/150 | 1/200 | 1/250 | 1/300 |
|---|---|---|---|---|---|---|---|
| Ordinary Torque | 100mN·m | | | | | | |
| Destruction Torque | 300mN·m | | | | | | |